	Product Code
Internal Bend	306_9N
External Bend	406_9Z

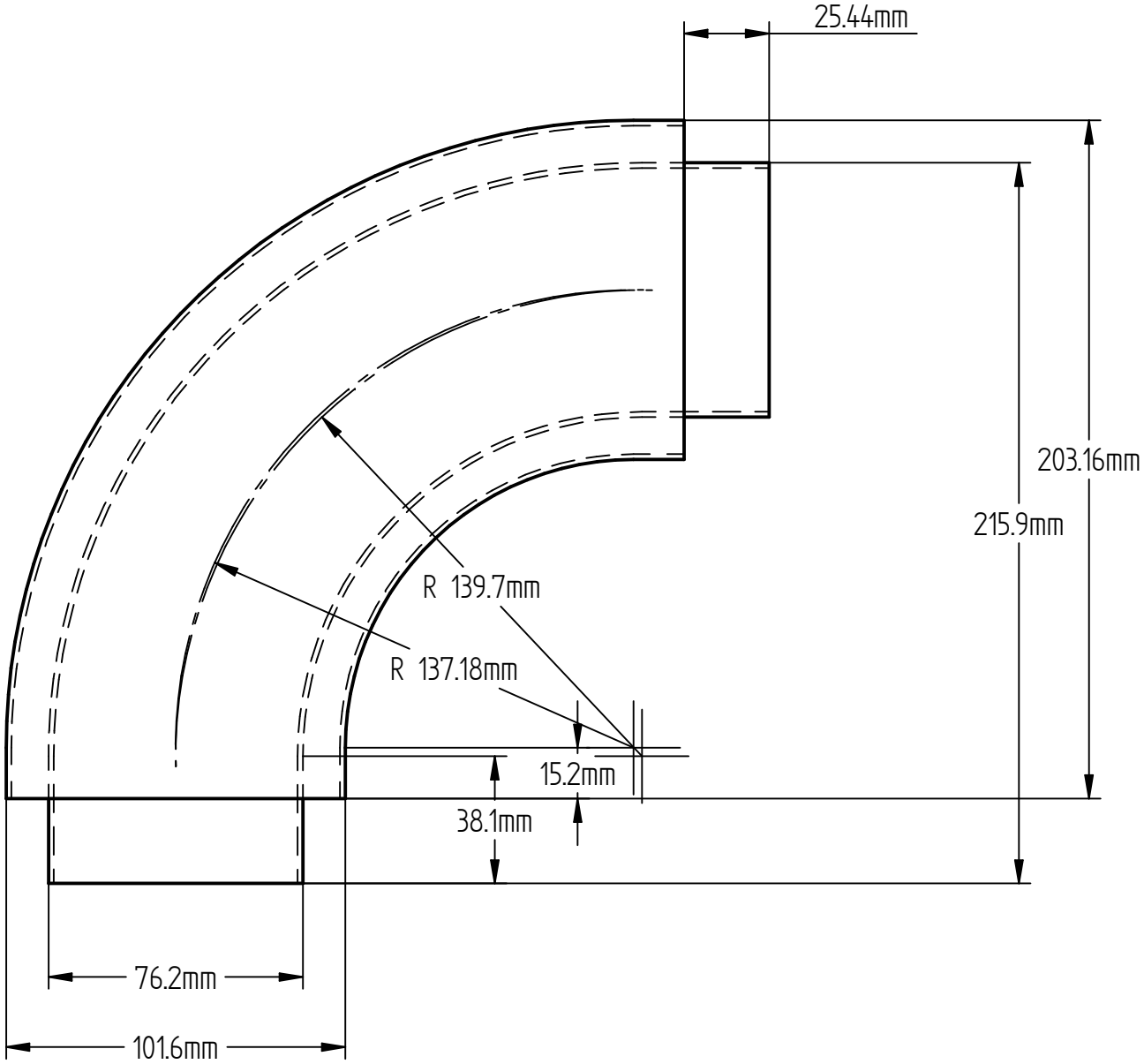

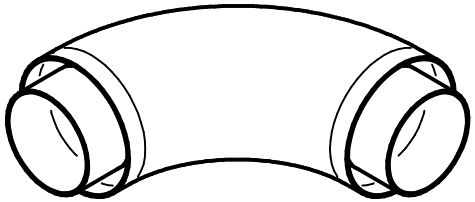

Ultibend
INDUSTRIES INC

TITLE
76.2 - 101.6mm Jacketing Combination

SIZE	DWG NO	REV
A4	30406_9J	001

Made to AS1528.3	Publish Date: 27/10/23

SHEET 1 OF 1