ALL PARTS: 316 STAINLESS STEEL
WITH EPDM SEAT AS STANDARD

Standard Inlet: 25.4mm Flat Faced Male
Standard Ball: 200mm Diam (316)
Standard Rod: Ø3/8" x 450mm long
Standard Seat: EPDM
All other components: 316 SS

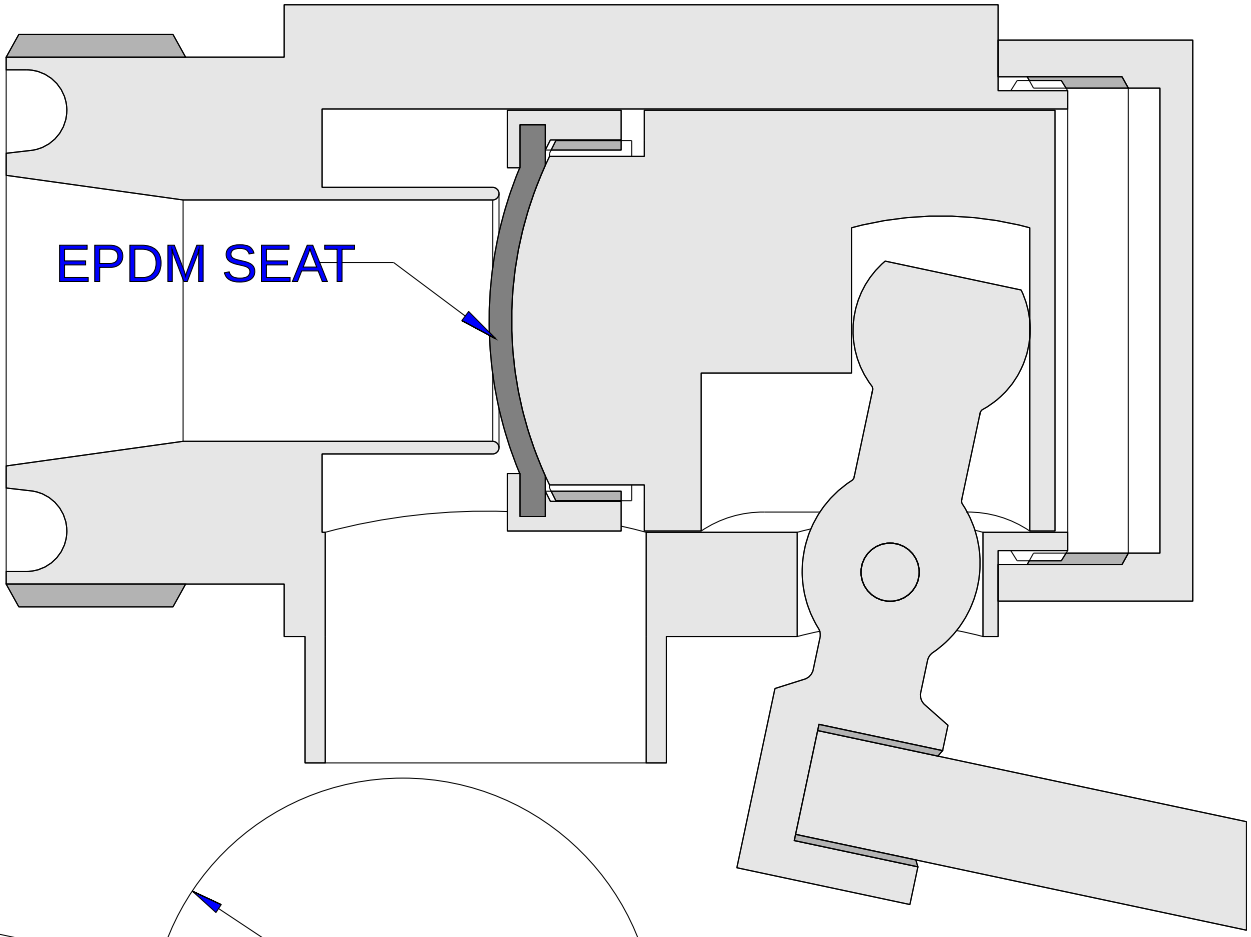

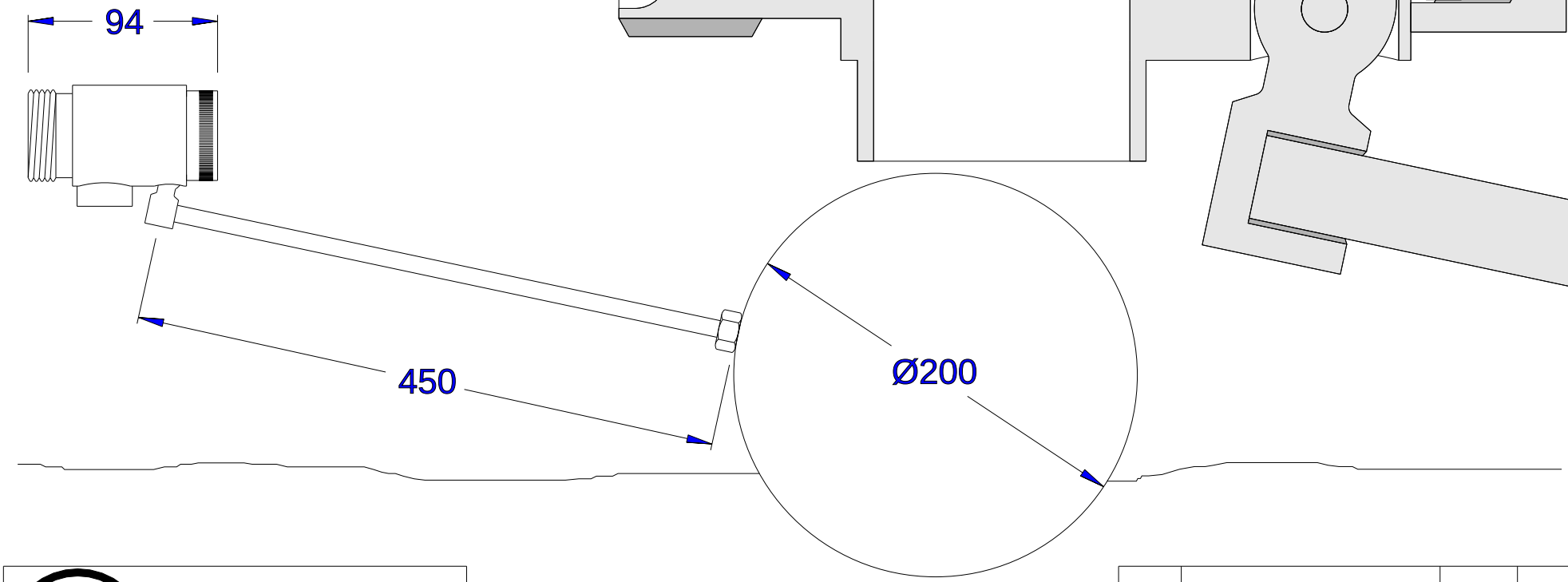

GEORDI	ITEM: 1" GEORDI FLOAT VALVE		UNITS: mm	REV	DESCRIPTION	NAME	DATE
DWG No. FLT2	PART: COMPLETE	DATE: 7-12-05	DRAWN: TP	CHECKED:			SHEET: 1